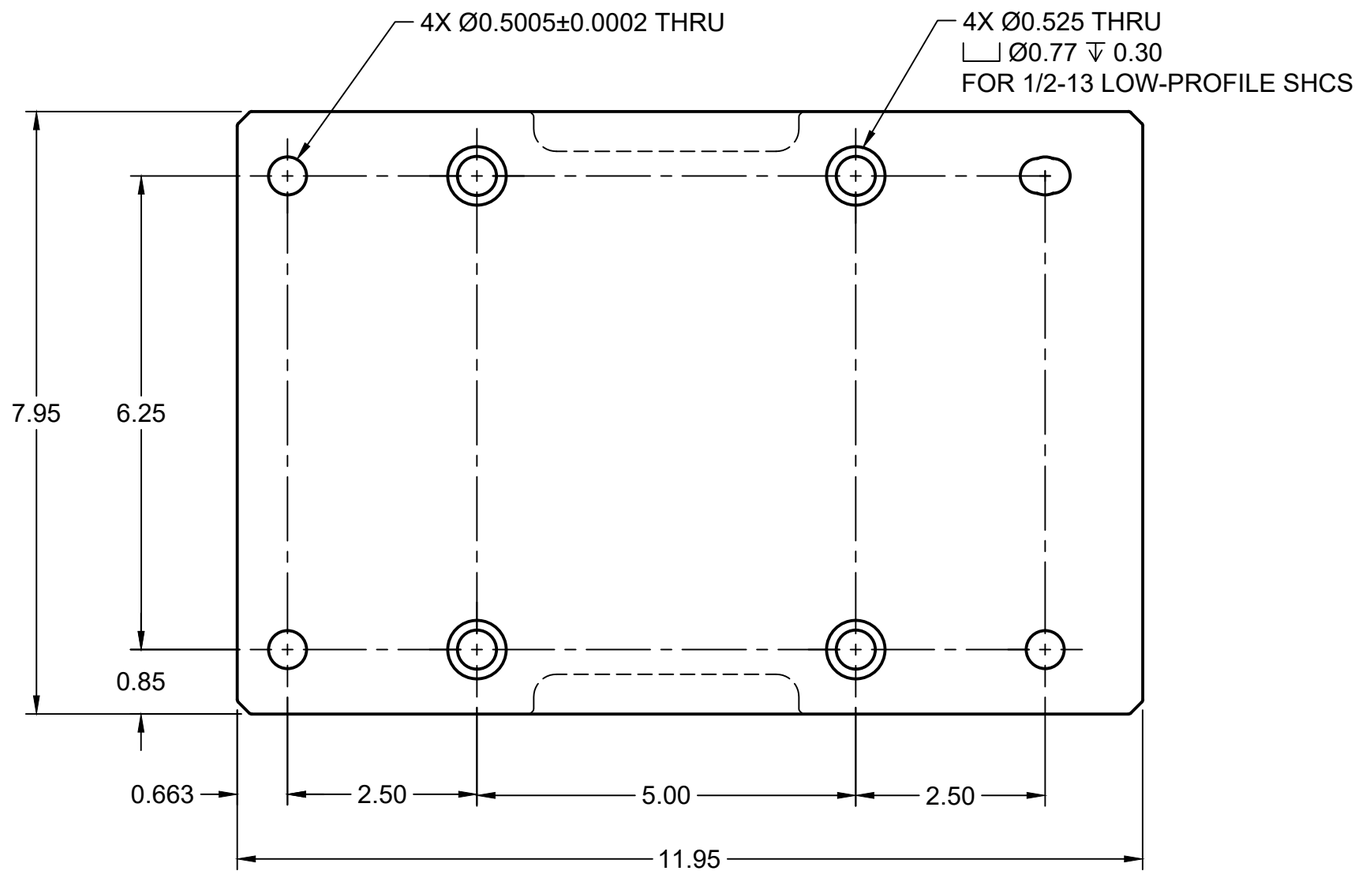

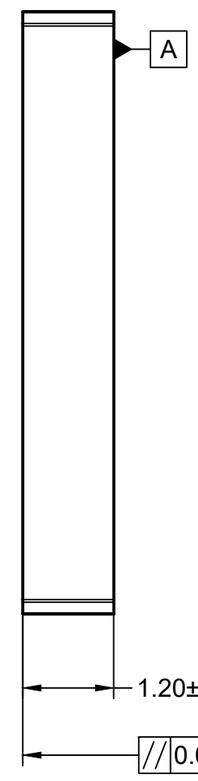

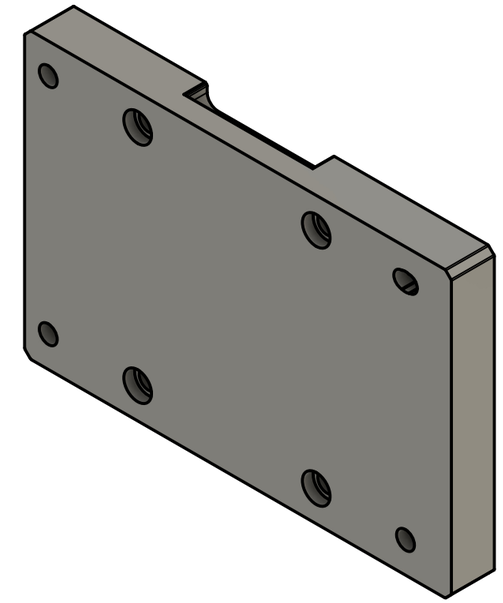

ALL DIMENSIONS IN INCHES (UNLESS OTHERWISE SPECIFIED)

SAUNDERS MACHINE WORKS SMW	PROJECT SMW Fixture Pallets			
	TITLE Blank Pallet 6061 Aluminum 12" x 8" Pallet General Dimensions & Tolerances			
APPROVED	SIZE	CODE	DWG NO	REV
CHECKED	B		S1148	1
DRAWN Alex Pinson 1/21/2026	SCALE 1:3	WEIGHT		SHEET 1/1