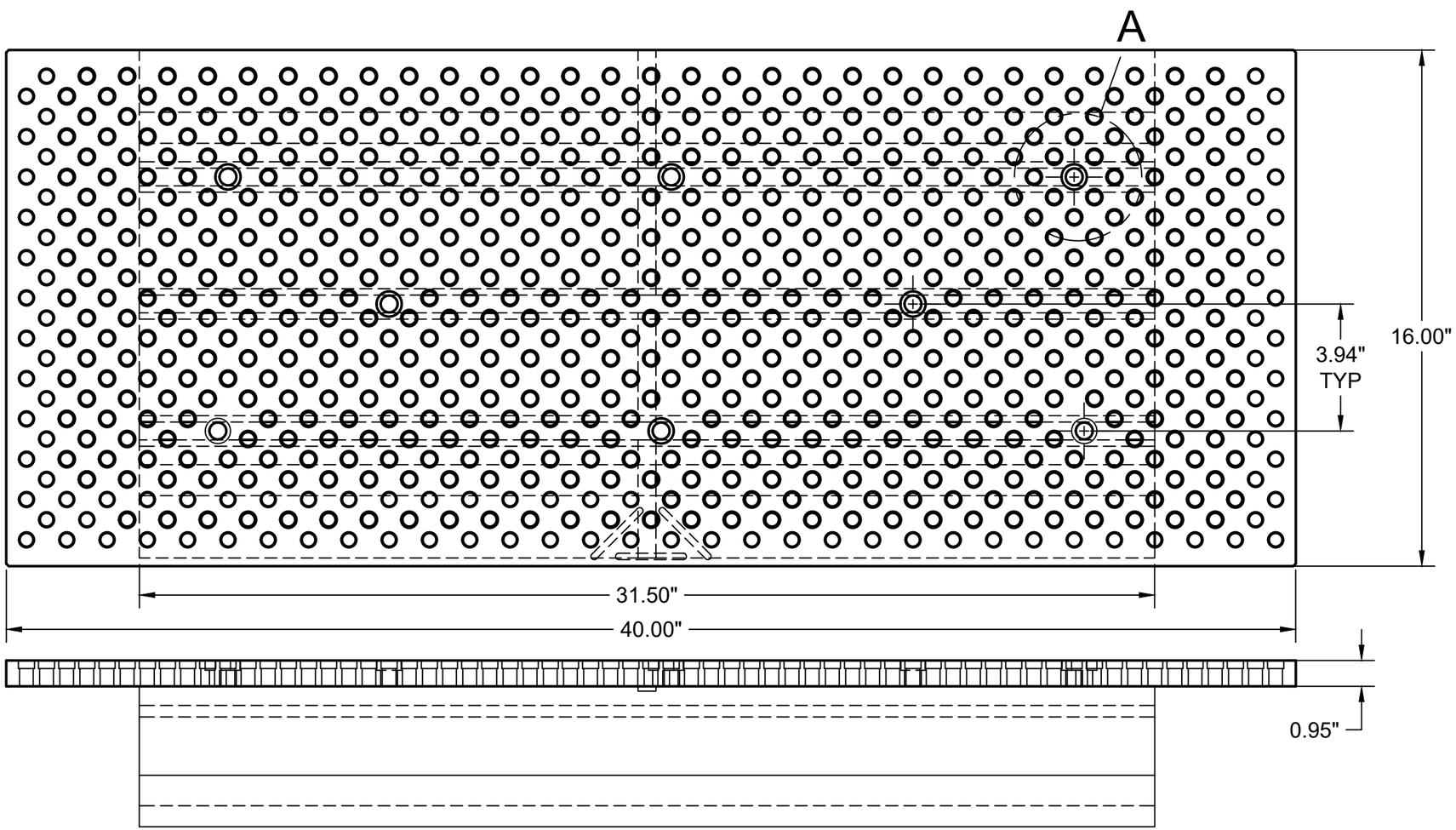

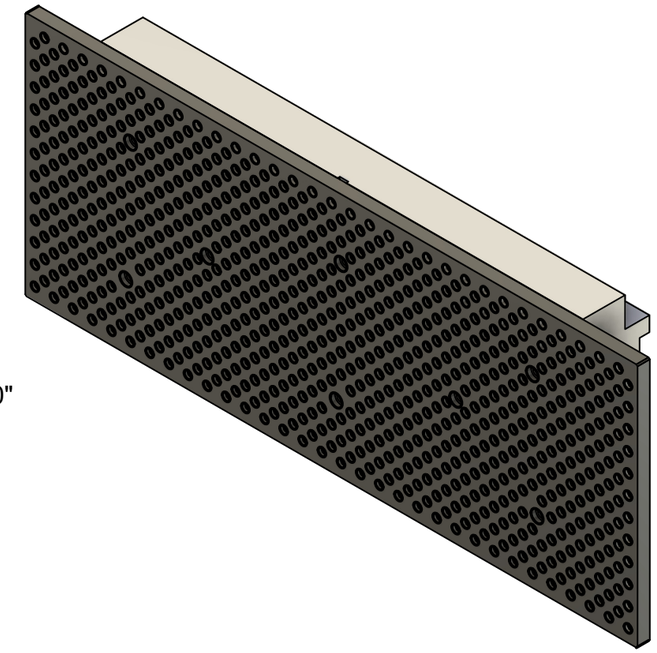

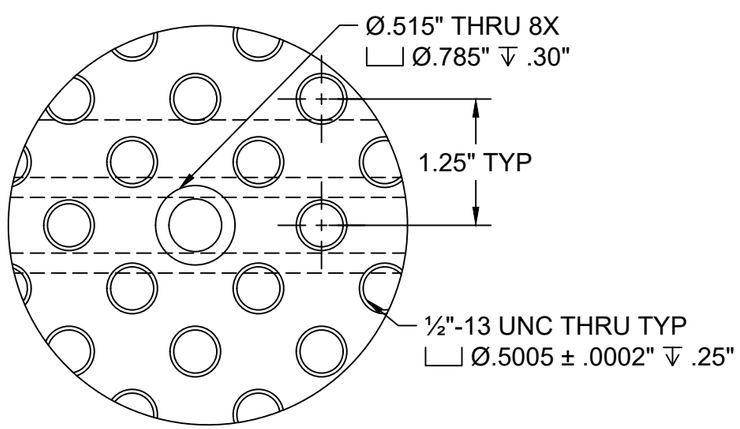

DETAIL A
SCALE 2:3

SAUNDERS MACHINE WORKS SMW	PROJECT SMW Fixture Plates			
	TITLE Brother Speedio S700X1 40" x 16" Fixture Plate & Table			
APPROVED	SIZE	CODE	DWG NO	REV
CHECKED	B			1.1
DRAWN Alex Pinson 1/02/2025	SCALE 1:4	WEIGHT		SHEET 1/1